EURO-WALL SYSTEMS

EURO C3 TRANSOM WITH MULLION (NON-HVHZ)(NON-IMPACT)

INSTALLATION NOTES:

1. *ONE (1)* INSTALLATION ANCHOR IS REQUIRED AT EACH ANCHOR LOCATION SHOWN, UNLESS OTHERWISE STATED.
2. THE NUMBER OF INSTALLATION ANCHORS DEPICTED IS THE MINIMUM NUMBER OF ANCHORS TO BE USED FOR PRODUCT INSTALLATION.
3. INSTALL INDIVIDUAL INSTALLATION ANCHORS WITHIN A TOLERANCE OF ±1/2 INCH OF THE DEPICTED LOCATION IN THE ANCHOR LAYOUT DETAIL (I.E., WITHOUT CONSIDERATION OF TOLERANCES). TOLERANCES ARE NOT CUMULATIVE FROM ONE INSTALLATION ANCHOR TO THE NEXT.
4. INSTALLATION ANCHORS AND ASSOCIATED HARDWARE MUST BE MADE OF CORROSION RESISTANT MATERIAL OR HAVE A CORROSION RESISTANT COATING.
5. SEE SHEET 3 FOR ANCHOR INFORMATION INCLUDING TYPES, DIAMETERS, MINIMUM EDGE DISTANCES AND MINIMUM EMBEDMENT REQUIREMENTS.
6. MINIMUM EMBEDMENT AND EDGE DISTANCE EXCLUDE WALL FINISHES, INCLUDING BUT NOT LIMITED TO STUCCO, FOAM, BRICK VENEER, AND SIDING.
7. INSTALLATION ANCHORS SHALL BE INSTALLED IN ACCORDANCE WITH ANCHOR MANUFACTURER'S INSTALLATION INSTRUCTIONS, AND ANCHORS SHALL NOT BE USED IN SUBSTRATES WITH STRENGTHS LESS THAN THE MINIMUM STRENGTH SPECIFIED BY THE ANCHOR MANUFACTURER.
8. FOR HOLLOW BLOCK AND GROUT FILLED BLOCK, DO NOT INSTALL INSTALLATION ANCHORS INTO MORTAR JOINTS. EDGE DISTANCE IS MEASURED FROM FREE EDGE OF BLOCK OR EDGE OF MORTAR JOINT INTO FACE SHELL OF BLOCK.
9. INSTALLATION ANCHOR CAPACITIES FOR PRODUCTS HEREIN ARE BASED ON SUBSTRATE MATERIALS WITH THE FOLLOWING PROPERTIES:
   A. WOOD - MINIMUM SPECIFIC GRAVITY OF *0.55*.
   B. CONCRETE -MINIMUM COMPRESSIVE STRENGTH OF 3000 PSI.
   C. GROUT-FILLED CMU- UNIT STRENGTH CONFORMS TO ASTM C-90 WITH MINIMUM COMPRESSIVE STRENGTH OF 2000 PSI AND GROUT CONFORMS TO ASTM C 476, MINIMUM GROUT COMPRESSIVE STRENGTH OF 2000 PSI.
   D. HOLLOW BLOCK CMU - UNIT STRENGTH CONFORMS TO ASTM C-90 WITH MINIMUM COMPRESSIVE STRENGTH OF 2000 PSI.
   E. STEEL - MINIMUM YIELD STRENGTH OF 33 KSI. MINIMUM 18 GA. WALL THICKNESS.
   F. ALUMINUM - MINIMUM 6063-T5 ALLOY OR BETTER. MIN. 1/8" THICKNESS

GENERAL NOTES:

1. THIS PRODUCT SHOWN HEREIN IS DESIGNED AND MANUFACTURED TO COMPLY WITH THE CURRENT FLORIDA BUILDING CODE (FBC); EXCLUDING HVHZ AND HAS BEEN EVALUATED IN ACCORDANCE WITH THE FOLLOWING:
   - AAMA/WDMA/CSA 101/I.S.2/A440-08
2. ADEQUACY OF THE EXISTING STRUCTURAL CONCRETE/MASONRY, 2X AND STEEL STUD FRAMING AS A MAIN WIND FORCE RESISTING SYSTEM CAPABLE OF WITHSTANDING AND TRANSFERRING APPLIED PRODUCT LOADS TO THE FOUNDATION IS THE RESPONSIBILITY OF THE ENGINEER OR ARCHITECT OF RECORD FOR THE PROJECT OF INSTALLATION.
3. 2X BUCKS (WHEN USED) SHALL BE DESIGNED AND ANCHORED TO PROPERLY TRANSFER ALL LOADS TO THE STRUCTURE. BUCK DESIGN AND INSTALLATION IS THE RESPONSIBILITY OF THE ENGINEER OR ARCHITECT OF RECORD FOR THE PROJECT OF INSTALLATION.
4. THE INSTALLATION DETAILS DESCRIBED HEREIN ARE GENERIC AND MAY NOT REFLECT ACTUAL CONDITIONS FOR A SPECIFIC SITE. IF SITE CONDITIONS CAUSE INSTALLATION TO DEVIATE FROM THE REQUIREMENTS DETAILED HEREIN, A LICENSED ENGINEER OR ARCHITECT SHALL PREPARE SITE SPECIFIC DOCUMENTS FOR USE WITH THIS DOCUMENT.
5. APPROVED IMPACT PROTECTIVE SYSTEM **IS REQUIRED** TO PROTECT THIS PRODUCT IN AREAS REQUIRING IMPACT RESISTANCE.
6. MULLIONS UNDER SEPARATE APPROVAL.
7. WINDOW FRAME MATERIAL: *ALUMINUM 6063-T5*
8. DISSIMILAR METALS INCLUDING FASTENERS THAT MAY COME INTO CONTACT WITH ALUMINUM UNIT FRAMING SHALL BE PROTECTED IN ACCORDANCE WITH THE CURRENT FBC.
9. DESIGNATION "O" STANDS FOR THE FOLLOWING*:*
   O: FIXED PANEL

TABLE OF CONTENTS

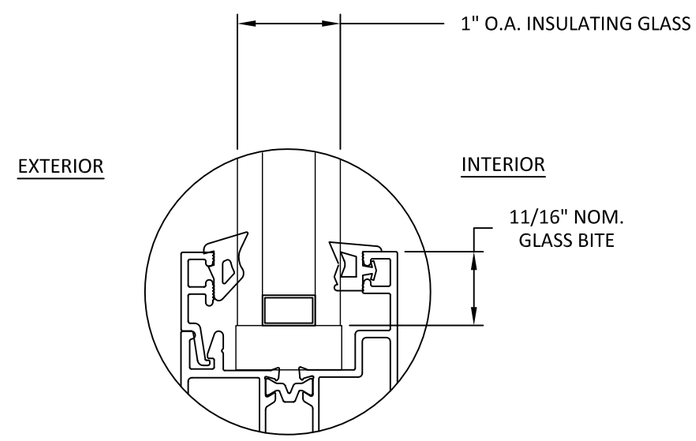

GLAZING DETAIL 1

NOTE:
1. ALL GLAZING CONFIGURATIONS SHALL COMPLY WITH SAFETY GLAZING REQUIREMENTS OUTLINED IN CURRENT FBC AND ASTM E 1300 GLASS CHART REQUIREMENTS.
2. SETTING BLOCK SHOULD BE 70-90 DUROMETER AS PER CH 24 OF THE CURRENT FBC.
3. GLASS LITES THAT EXCEED 36" IN WIDTH SHALL USE SETTING BLOCKS AT $\frac{1}{4}$ SPAN FROM CORNERS.

DESIGN PRESSURE RATING

WINDOW SIZE	DESIGN PRESSURE	MISSILE IMPACT RATING
SEE NEXT SHEET	SEE NEXT SHEET	NON-IMPACT

euro-wall
SUPERIOR BY DESIGN

EURO-WALL SYSTEMS, LLC
24100 TISEO BOULEVARD
PORT CHARLOTTE, FL 33980
PH: 888-989-3876

TITLE: EURO C3 TRANSOM WITH MULLION (NON-HVHZ) (NON-IMPACT)
INSTALLATION & GENERAL NOTES

PREPARED BY:
BUILDING DROPS, INC.
398 E. DANIA BEACH BLVD., STE. 338
DANIA BEACH, FL 33004
PH: (954)399-8478
FAX: (954)744.4738
WEB: www.buildingdrops.com

REMARKS	BY	DATE
NEW PROFILE	LL	07/22

THE INSTALLATION DETAILS DESCRIBED HEREIN ARE GENERIC AND MAY NOT REFLECT ACTUAL CONDITIONS FOR A SPECIFIC SITE. IF SITE CONDITIONS CAUSE INSTALLATION TO DEVIATE FROM THE REQUIREMENTS DETAILED HEREIN, A LICENSED ENGINEER OR ARCHITECT SHALL PREPARE SITE SPECIFIC DOCUMENTS FOR USE WITH THIS DOCUMENT.

Digitally signed by Hermes F. Norero, P.E.
Reason: I am approving this document
Date: 2022.08.16 12:58:46 -04'00'

HERMES F. NORERO
LICENSE No. 73778
STATE OF FLORIDA
PROFESSIONAL ENGINEER

HERMES F. NORERO, P.E.
FLORIDA P.E. No 73778
BUILDING DROPS, INC
398 E. DANIA BEACH BLVD. # 338
DANIA BEACH, FL 33004
FBPE CERT. OF AUTHORIZATION No. 29578

FL #: FL17432

DATE: 10.20.17

DWG. BY: EG | CHK. BY: HFN

SCALE: NTS

DWG. #: EWS006

SHEET: 1 OF 5

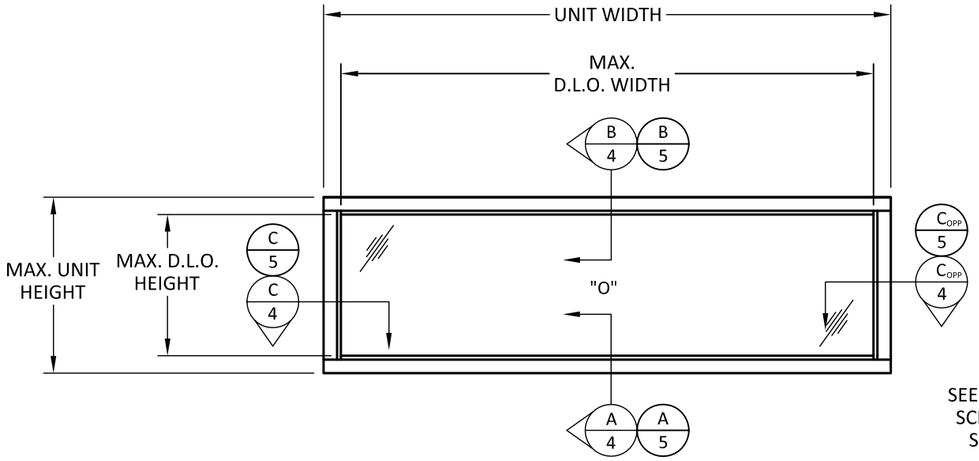

ELEVATION

SINGLE TRANSOM

D.L.O WIDTH = F.W. - 7.125"
D.L.O HEIGHT = F.H. - 7.125"

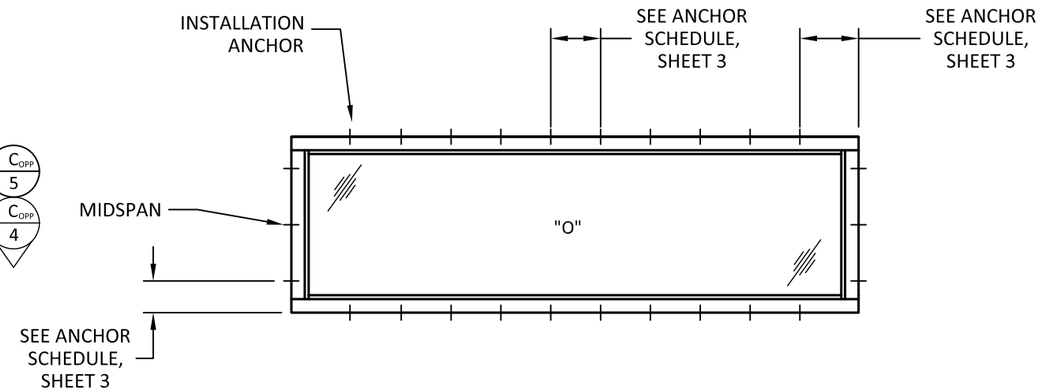

ANCHOR LAYOUT

SINGLE TRANSOM

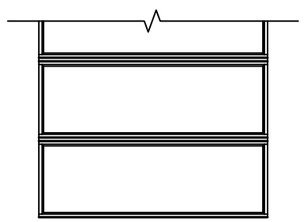

FIGURE A.1

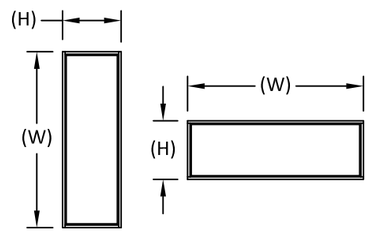

FIGURE A.2

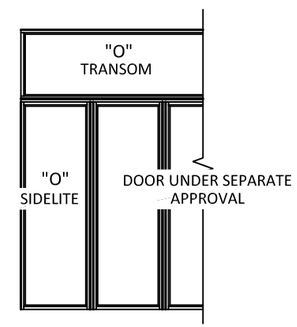

FIGURE A.3

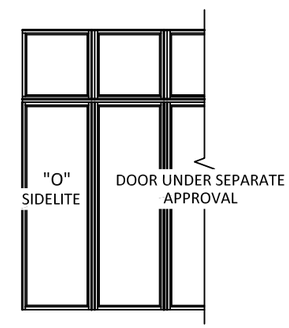

FIGURE A.4

DESIGN LOAD CAPACITY (PSF) FOR GLASS TYPE G1

LONG LEG 'W' (INCHES) \ SHORT LEG 'H' (INCHES)	12	18	24	30	36	42.5	48	54	60	66	72
48	60.00	60.00	60.00	60.00	60.00	60.00	53.13	53.13	53.13	53.13	53.13
54	60.00	60.00	60.00	60.00	60.00	60.00	53.13	47.22	47.22	47.22	47.22
60	60.00	60.00	60.00	60.00	60.00	60.00	53.13	47.22	42.50	42.50	42.50
66	60.00	60.00	60.00	60.00	60.00	60.00	53.13	47.22	42.50	38.64	38.64
72	60.00	60.00	60.00	60.00	60.00	60.00	53.13	47.22	42.50	38.64	
78	60.00	60.00	60.00	60.00	60.00	60.00	53.13	47.22	42.50		
84	60.00	60.00	60.00	60.00	60.00	60.00	53.13	47.22			
90	60.00	60.00	60.00	60.00	60.00	60.00	53.13	47.22			
96	60.00	60.00	60.00	60.00	60.00	60.00	53.13				
102	60.00	60.00	60.00	60.00	60.00	60.00	53.13				
108	60.00	60.00	60.00	60.00	60.00	60.00					
115.625	60.00	60.00	60.00	60.00	60.00	60.00					
120	60.00	60.00	60.00	60.00	60.00						
126	60.00	60.00	60.00	60.00	60.00						
132	60.00	60.00	60.00	60.00	60.00						
138	60.00	60.00	60.00	60.00							
144	60.00	60.00	60.00	60.00							
150	60.00	60.00	60.00	60.00							

Not approved - Exceeds maximum tested square footage

NOTE:
1. MULLIONS & THEIR RESPECITVE PERFORAMANCE SHALL BE APPROVED UNDER SEPARATE APPROVAL. THE LESSER DESIGN PRESSURE OF INDIVIDUAL WINDOW OR MULLION OF INSTALLATION SHALL GOVERN.
2. THE NUMBER OF SIDELITES OR TRANSOMS WHICH MAY BE UTILIZED IS UNLIMITED SUCH THAT THE SUBSTRUCTURE AND/OR MULLIONS ARE CAPABLE OF RESISTING IMPOSED WIND AND DEAD LOADS TO THE HOST STRUCTURE.
3. WINDOW UNITS MAY BE STACKED VERTICALLY, REFER TO FIGURE A.1
4. WINDOW WIDTH (W) AND HEIGHT (H) ARE INTERCHANGEABLE FOR SALL SIZES SHOWN HEREIN. SIZE NOT TO EXCEED MAXIMUM DIMENSIONS SHOWN. REFER. TO FIGURE A.2.
5. WINDOW UNIT MAY BE USED AS A SIDELITE TO DOOR SYSTEM. DOOR SYSTEM AND MULLION UNDER SEPARATE APPROVAL. REFER TO FIGURE A.3.

euro-wall
SUPERIOR BY DESIGN

EURO-WALL SYSTEMS, LLC
24100 TISEO BOULEVARD
PORT CHARLOTTE, FL 33980
PH: 888-989-3876

TITLE: EURO C3 TRANSOM WITH MULLION (NON-HVHZ) (NON-IMPACT)
DESIGN PRESSURE TABLE, ELEVATIONS & ANCHOR LAYOUTS

PREPARED BY:
BUILDING DROPS, INC.
398 E. DANIA BEACH BLVD., STE. 338
DANIA BEACH, FL 33004
PH: (954)399-8478
FAX: (954)744.4738
WEB: www.buildingdrops.com

REMARKS	BY	DATE
NEW PROFILE	LL	07/22

THE INSTALLATION DETAILS DESCRIBED HEREIN ARE GENERIC AND MAY NOT REFLECT ACTUAL CONDITIONS FOR A SPECIFIC SITE. IF SITE CONDITIONS CAUSE INSTALLATION TO DEVIATE FROM THE REQUIREMENTS DETAILED HEREIN, A LICENSED ENGINEER OR ARCHITECT SHALL PREPARE SITE SPECIFIC DOCUMENTS FOR USE WITH THIS DOCUMENT.

HERMES F. NORERO
LICENSE No. 73778
STATE OF FLORIDA
PROFESSIONAL ENGINEER

HERMES F. NORERO, P.E.
FLORIDA P.E. No 73778
BUILDING DROPS, INC
398 E. DANIA BEACH BLVD. # 338
DANIA BEACH, FL 33004
FBPE CERT. OF AUTHORIZATION No. 29578

FL #: FL17432

DATE: 10.20.17

DWG. BY: EG | CHK. BY: HFN

SCALE: NTS

DWG. #: EWS006

SHEET: 2 OF 5

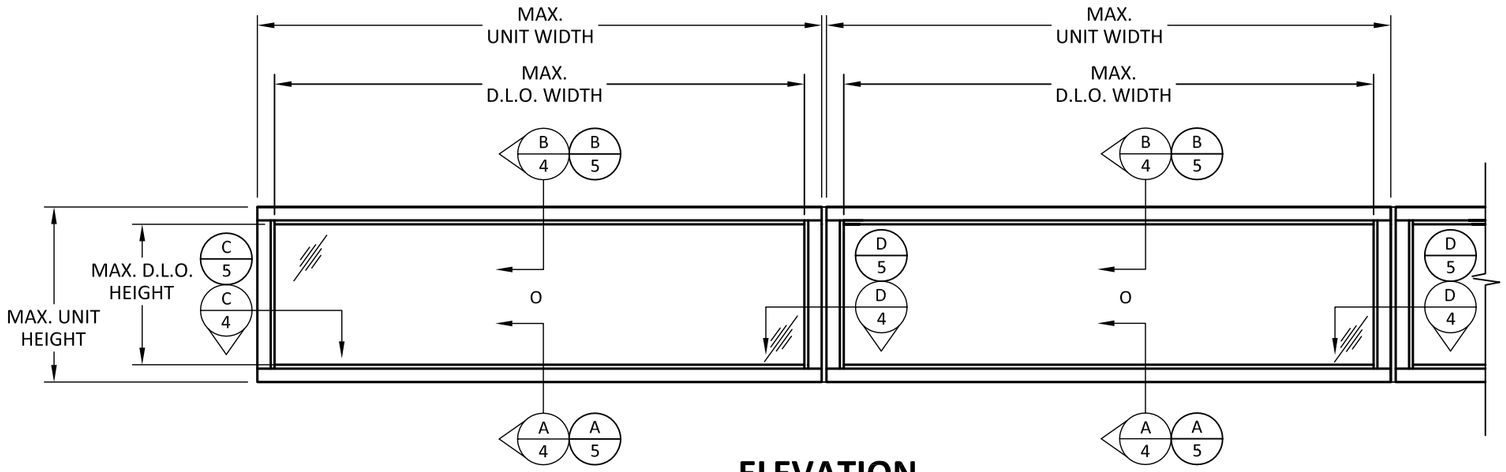

ELEVATION

MULLED TRANSOMS

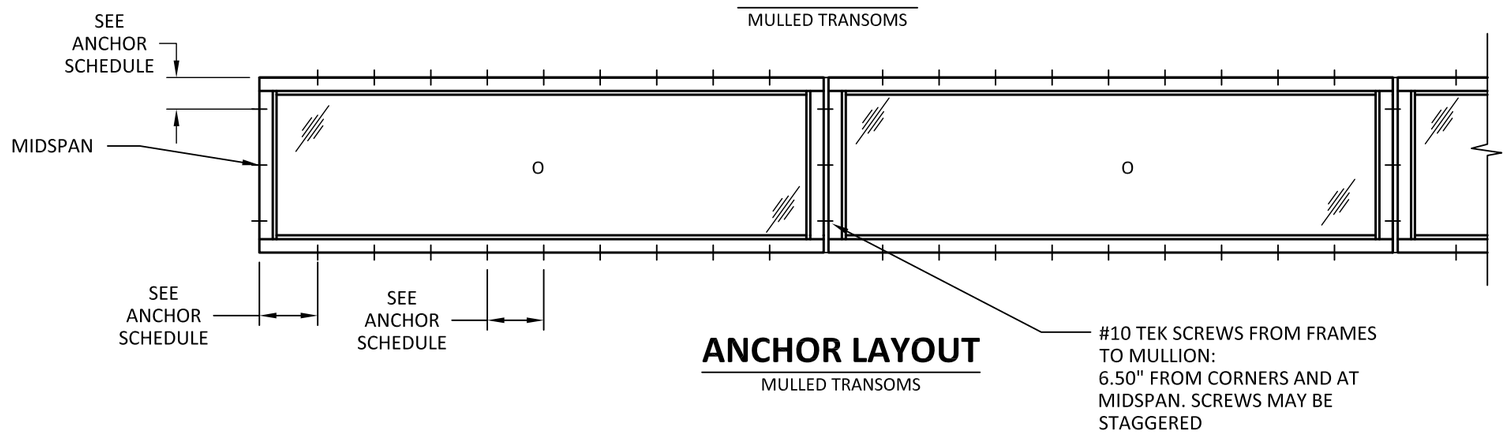

ANCHOR LAYOUT

MULLED TRANSOMS

ANCHOR SCHEDULE

SUBSTRATE	ANCHOR	MIN. EMBED	MIN. EDGE	CORNER SPACING	MAX. SPACING
CONCRETE MIN. F'C = 3000 PSI	TAPCON 3/16"	1 3/4"	2 1/2"	6"	12"
GROUT-FILLED CMU MIN. COMPRESSIVE STRENGTH = 2000 PSI	TAPCON 3/16"	1 3/4"	2 1/2"	6"	12"
WOOD MIN. S.G. = 0.55	#10 WOOD SCREW	1 1/2"	3/4"	6"	12"
ALUMINUM MIN. 1/8" 6063-T5	#10 SMS	3 THREADS	1 1/2"	6"	12"
STEEL MIN. 18 GA A36	#10 SMS	3 THREADS	1 1/2"	6"	12"

euro-wall
SUPERIOR BY DESIGN

EURO-WALL SYSTEMS, LLC
24100 TISEO BOULEVARD
PORT CHARLOTTE, FL 33980
PH: 888-989-3876

TITLE:
EURO C3 TRANSOM WITH MULLION (NON-HVHZ) (NON-IMPACT)
MULLED ELEVATIONS, ANCHOR LAYOUT, AND ANCHOR SCHEDULE

PREPARED BY:
BUILDING DROPS, INC.
398 E. DANIA BEACH BLVD., STE. 338
DANIA BEACH, FL 33004
PH: (954)399-8478
FAX: (954)744.4738
WEB: www.buildingdrops.com

REMARKS	BY	DATE
NEW PROFILE	LL	07/22

THE INSTALLATION DETAILS DESCRIBED HEREIN ARE GENERIC AND MAY NOT REFLECT ACTUAL CONDITIONS FOR A SPECIFIC SITE. IF SITE CONDITIONS CAUSE INSTALLATION TO DEVIATE FROM THE REQUIREMENTS DETAILED HEREIN, A LICENSED ENGINEER OR ARCHITECT SHALL PREPARE SITE SPECIFIC DOCUMENTS FOR USE WITH THIS DOCUMENT.

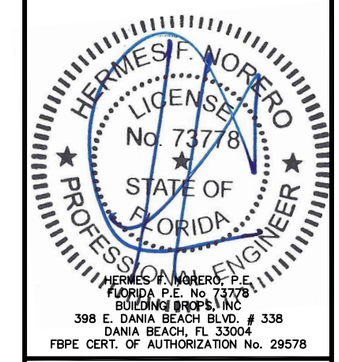

FL #: FL17432

DATE: 10.20.17

DWG. BY: EG

CHK. BY: HFN

SCALE: NTS

DWG. #: EWS006

SHEET: 3 OF 5

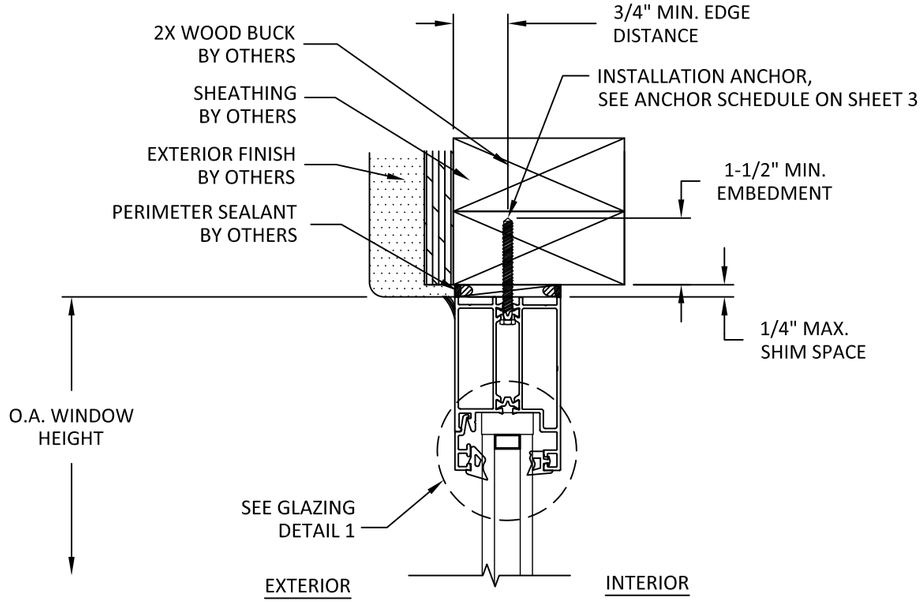

B/4 VERTICAL SECTION

2X WOOD STUD SUBSTRATE - HEAD
THERMALLY BROKEN RAIL

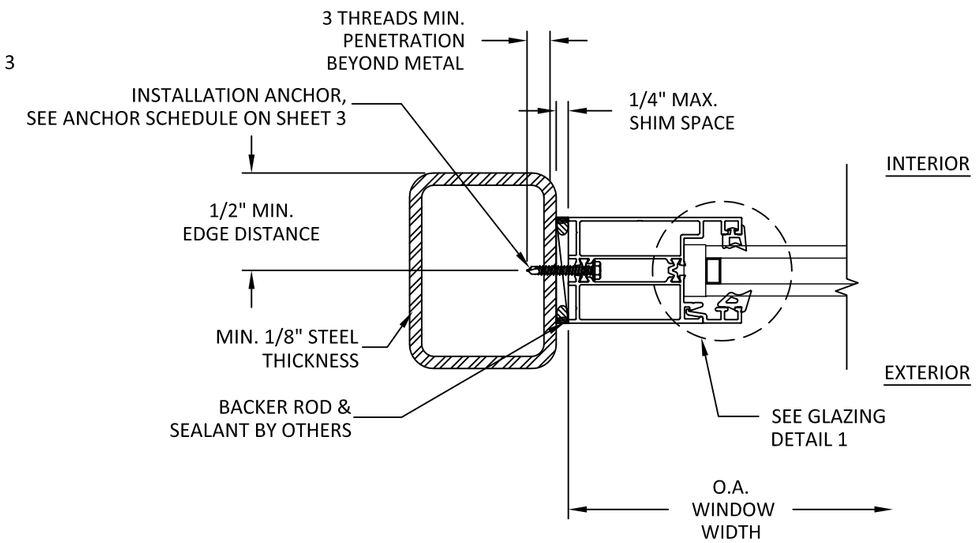

C/4 HORIZONTAL SECTION

STEEL TUBE - JAMB
THERMALLY BROKEN RAIL

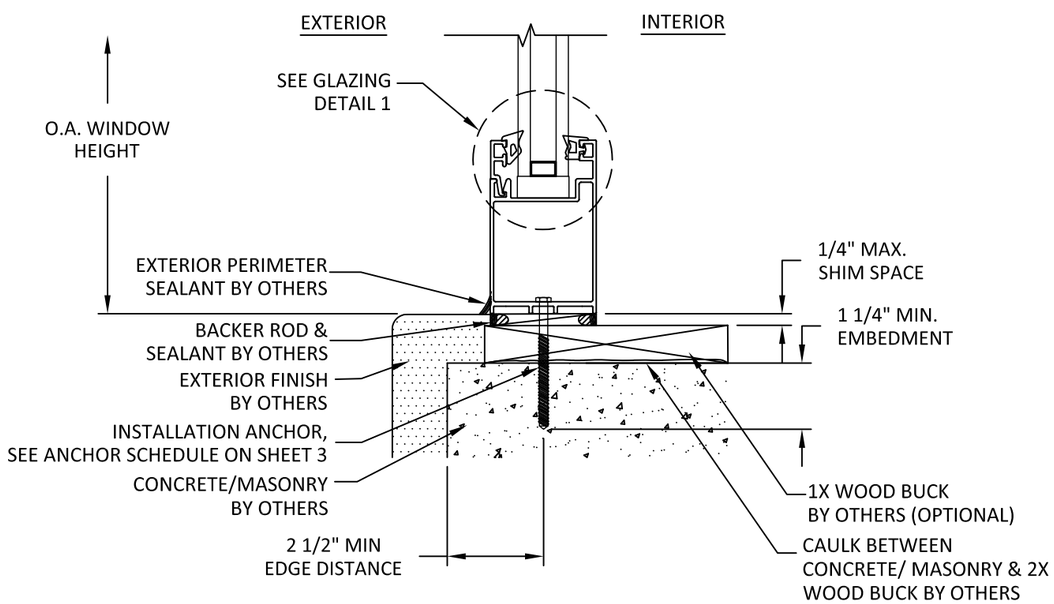

A/4 VERTICAL SECTION

CONCRETE W/ 1X BUCK (OPTIONAL) - SILL
NON-THERMALLY BROKEN RAIL

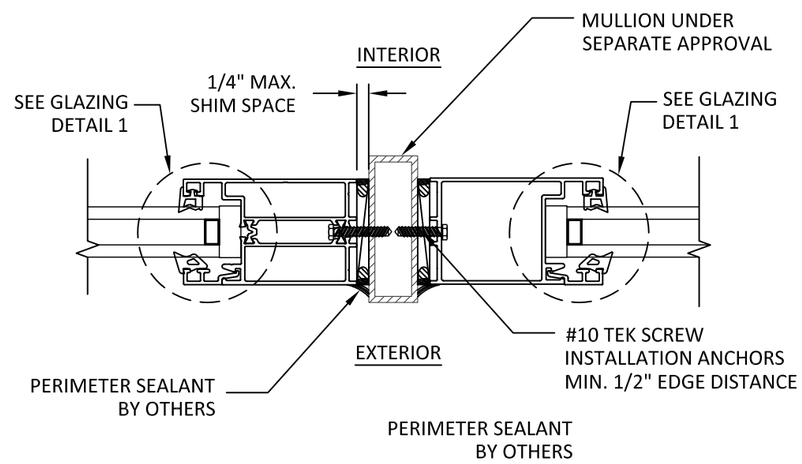

D/4 HORIZONTAL SECTION

MULLED ASSEMBLIES - JAMB
THERMALLY BROKEN/NON-THERMALLY BROKEN RAIL

euro-wall
SUPERIOR BY DESIGN

EURO-WALL SYSTEMS, LLC
24100 TISEO BOULEVARD
PORT CHARLOTTE, FL 33980
PH: 888-989-3876

TITLE: EURO C3 TRANSOM WITH MULLION (NON-HVHZ) (NON-IMPACT)
VERTICAL AND HORIZONTAL SECTIONS - THERMAL/NON-THERMAL RAIL

PREPARED BY:
BUILDING DROPS, INC.
398 E. DANIA BEACH BLVD., STE. 338
DANIA BEACH, FL 33004
PH: (954)399-8478
FAX: (954)744.4738
WEB: www.buildingdrops.com

REMARKS	BY	DATE
NEW PROFILE	LL	07/22

THE INSTALLATION DETAILS DESCRIBED HEREIN ARE GENERIC AND MAY NOT REFLECT ACTUAL CONDITIONS FOR A SPECIFIC SITE. IF SITE CONDITIONS CAUSE INSTALLATION TO DEVIATE FROM THE REQUIREMENTS DETAILED HEREIN, A LICENSED ENGINEER OR ARCHITECT SHALL PREPARE SITE SPECIFIC DOCUMENTS FOR USE WITH THIS DOCUMENT.

HERMES F. NORERO
LICENSE
No. 73778
STATE OF
FLORIDA
PROFESSIONAL ENGINEER

HERMES F. NORERO, P.E.
FLORIDA P.E. No 73778
BUILDING DROPS, INC
398 E. DANIA BEACH BLVD. # 338
DANIA BEACH, FL 33004
FBPE CERT. OF AUTHORIZATION No. 29578

FL #: FL17432

DATE: 10.20.17

DWG. BY: EG | CHK. BY: HFN

SCALE: NTS

DWG. #: EWS006

SHEET: 4 OF 5

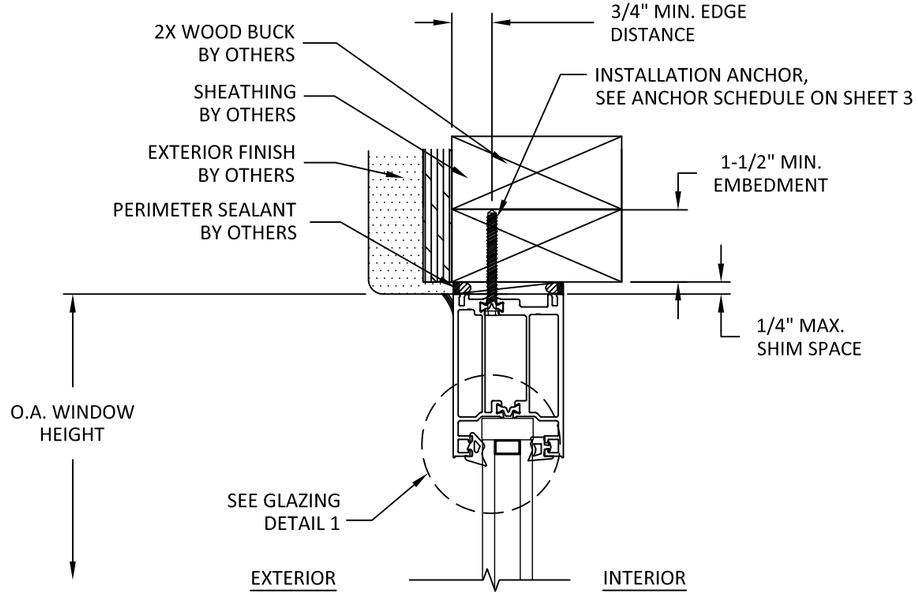

B/5 VERTICAL SECTION

2X WOOD STUD SUBSTRATE - HEAD
THERMALLY BROKEN STILE

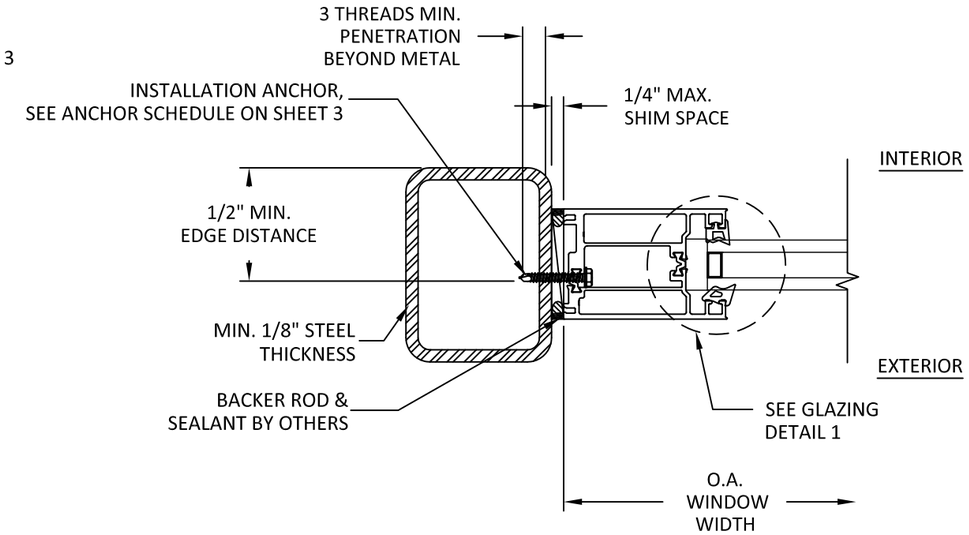

C/5 HORIZONTAL SECTION

STEEL TUBE - JAMB
THERMALLY BROKEN STILE

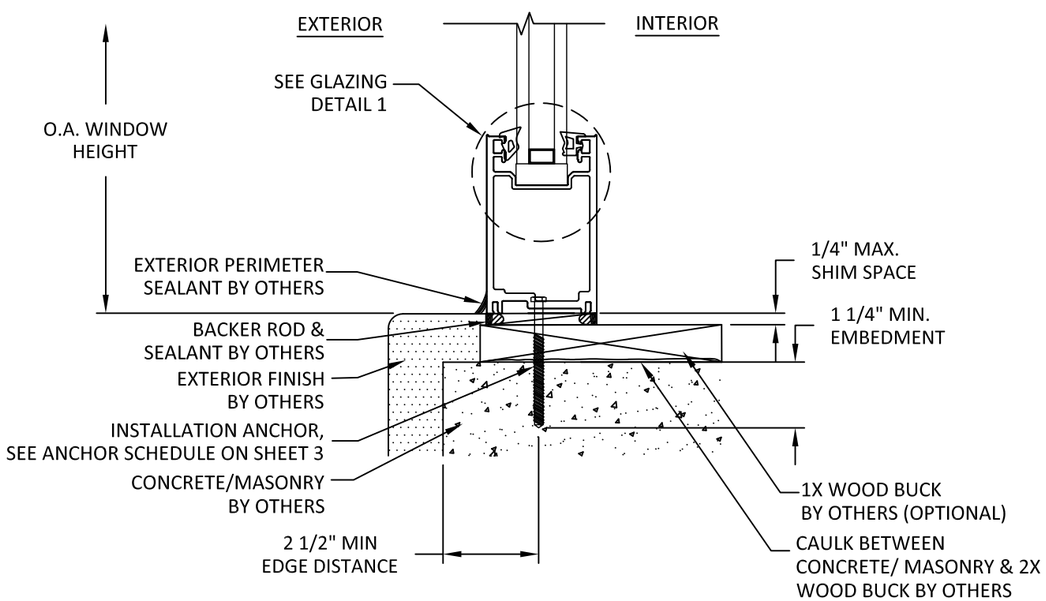

A/5 VERTICAL SECTION

CONCRETE W/ 1X BUCK (OPTIONAL) - SILL
NON-THERMALLY BROKEN STILE

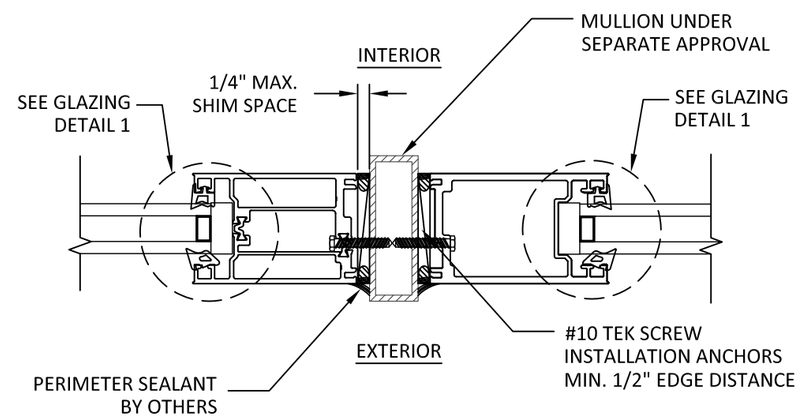

D/5 HORIZONTAL SECTION

MULLED ASSEMBLIES - JAMB
THERMALLY BROKEN/NON-THERMALLY BROKEN STILE

euro-wall
SUPERIOR BY DESIGN

EURO-WALL SYSTEMS, LLC
24100 TISEO BOULEVARD
PORT CHARLOTTE, FL 33980
PH: 888-989-3876

TITLE: EURO C3 TRANSOM WITH MULLION (NON-HVHZ) (NON-IMPACT)
VERTICAL AND HORIZONTAL SECTIONS - THERMAL/NON-THERMAL STILE

PREPARED BY:
BUILDING DROPS, INC.
398 E. DANIA BEACH BLVD., STE. 338
DANIA BEACH, FL 33004
PH: (954)399-8478
FAX: (954)744.4738
WEB: www.buildingdrops.com

REMARKS	BY	DATE
NEW PROFILE	LL	07/22

HERMES F. NORERO
LICENSE
No. 73778
STATE OF
FLORIDA
PROFESSIONAL ENGINEER

HERMES F. NORERO, P.E.
FLORIDA P.E. No 73778
BUILDING DROPS, INC
398 E. DANIA BEACH BLVD. # 338
DANIA BEACH, FL 33004
FBPE CERT. OF AUTHORIZATION No. 29578

FL #: FL17432

DATE: 10.20.17

DWG. BY: EG | CHK. BY: HFN

SCALE: NTS

DWG. #: EWS006

SHEET: 5 OF 5